SYMONS VERSIFORM® SYSTEM IDENTIFICATION CHART

This chart will assist order preparation for all Versiform System components. When placing an order either by mail or by phone, please identify each component by its correct name and Product Code number. Should you have questions about availability of a special product, please contact your Symons Account Manager or Symons Distribution Center.

PANELS

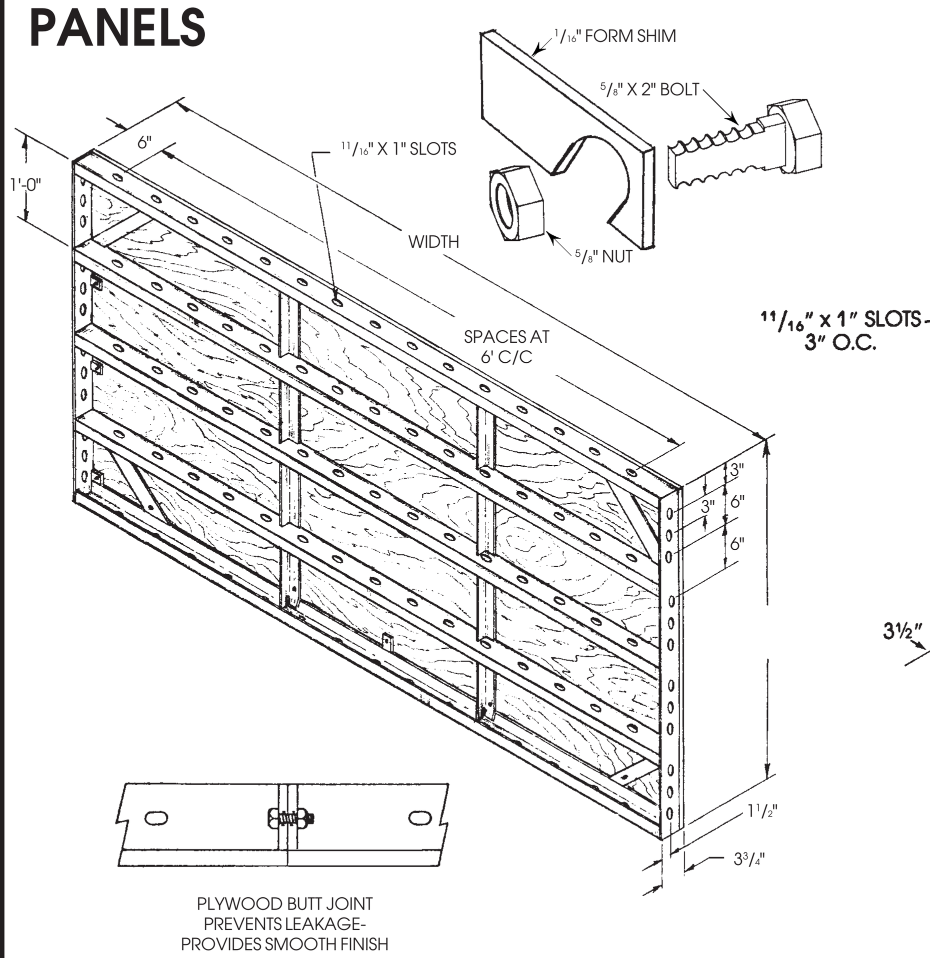

CORNERS

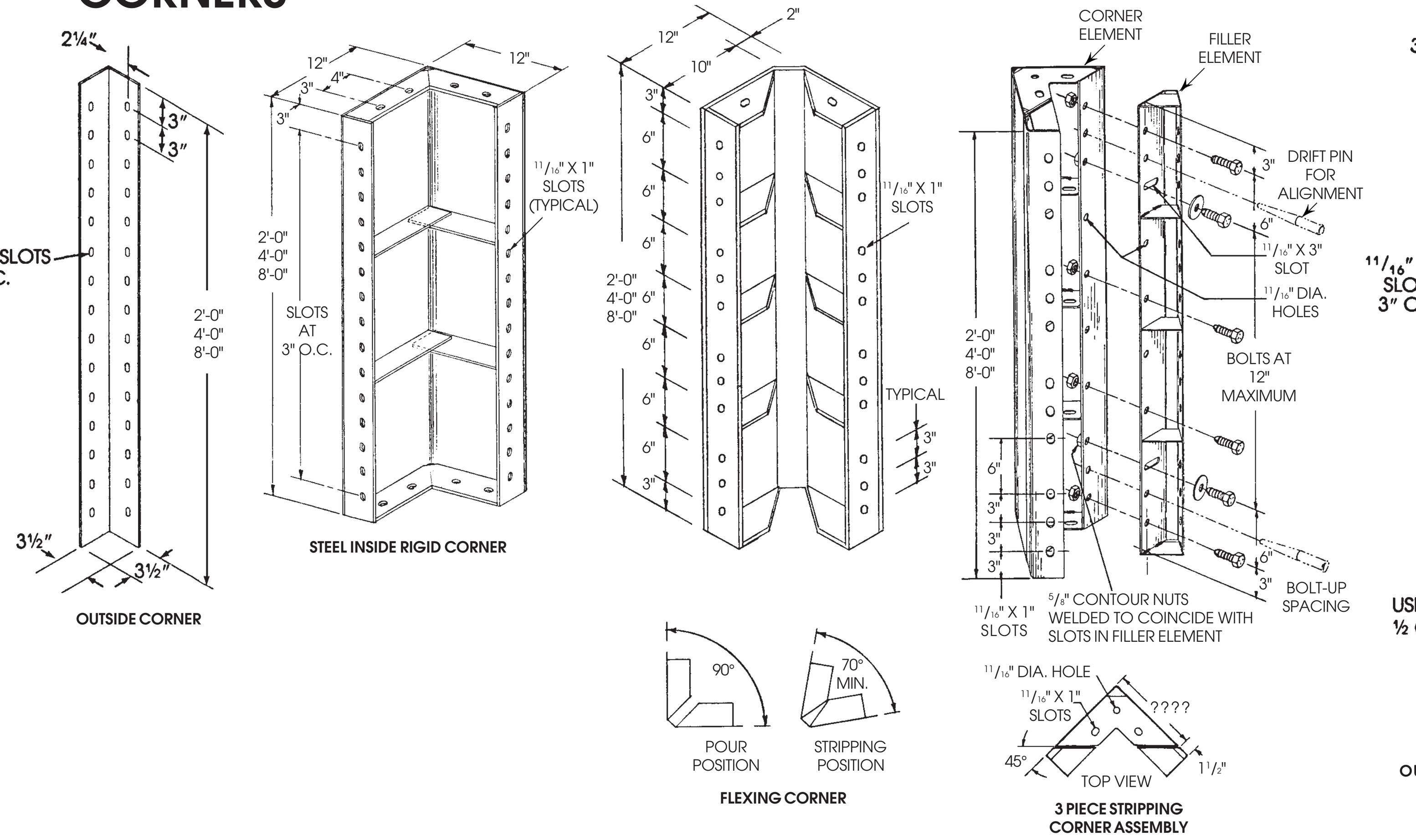

FILLERS

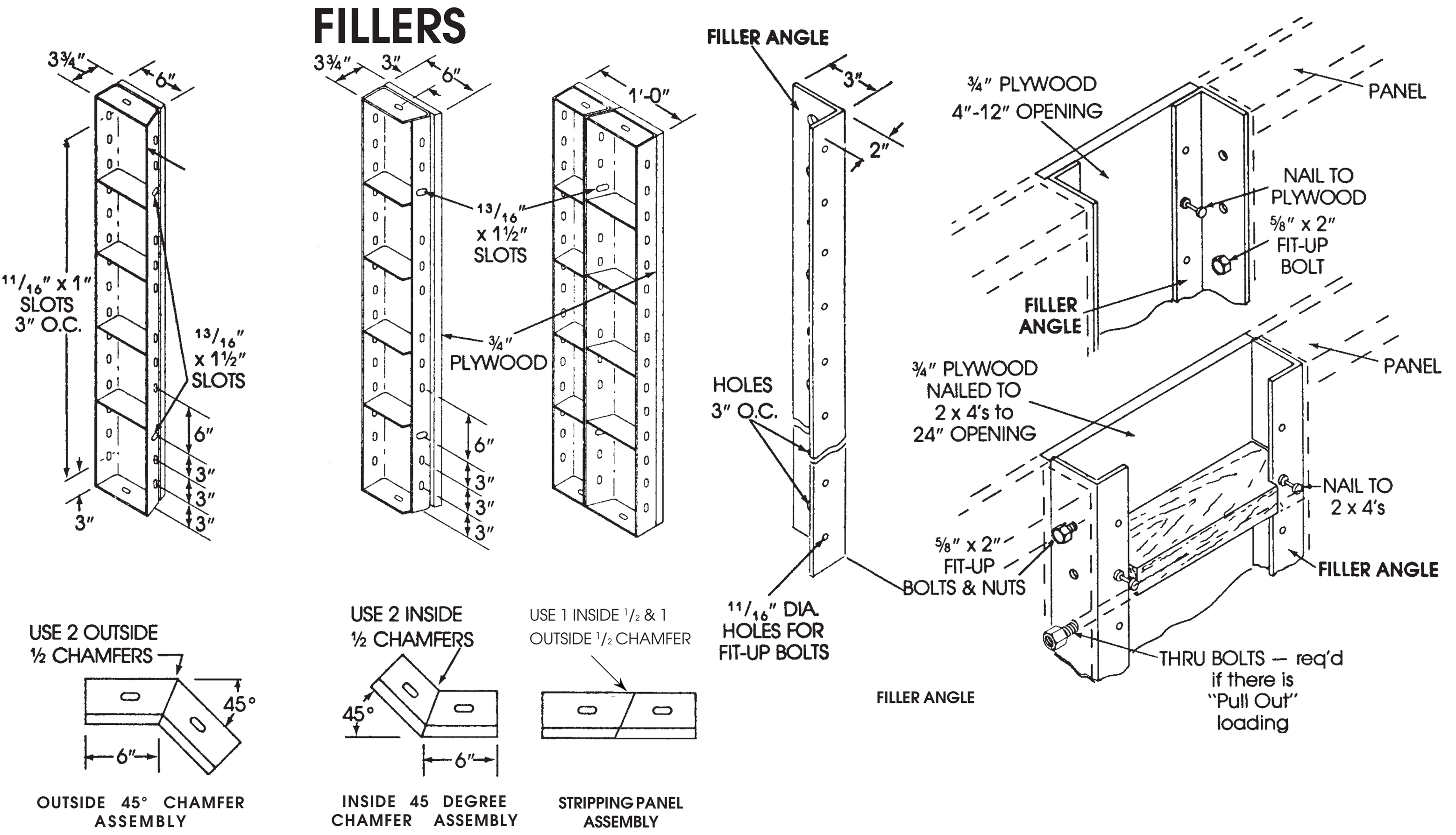

VERSIFORM STEEL-PLY TRANSITIONS

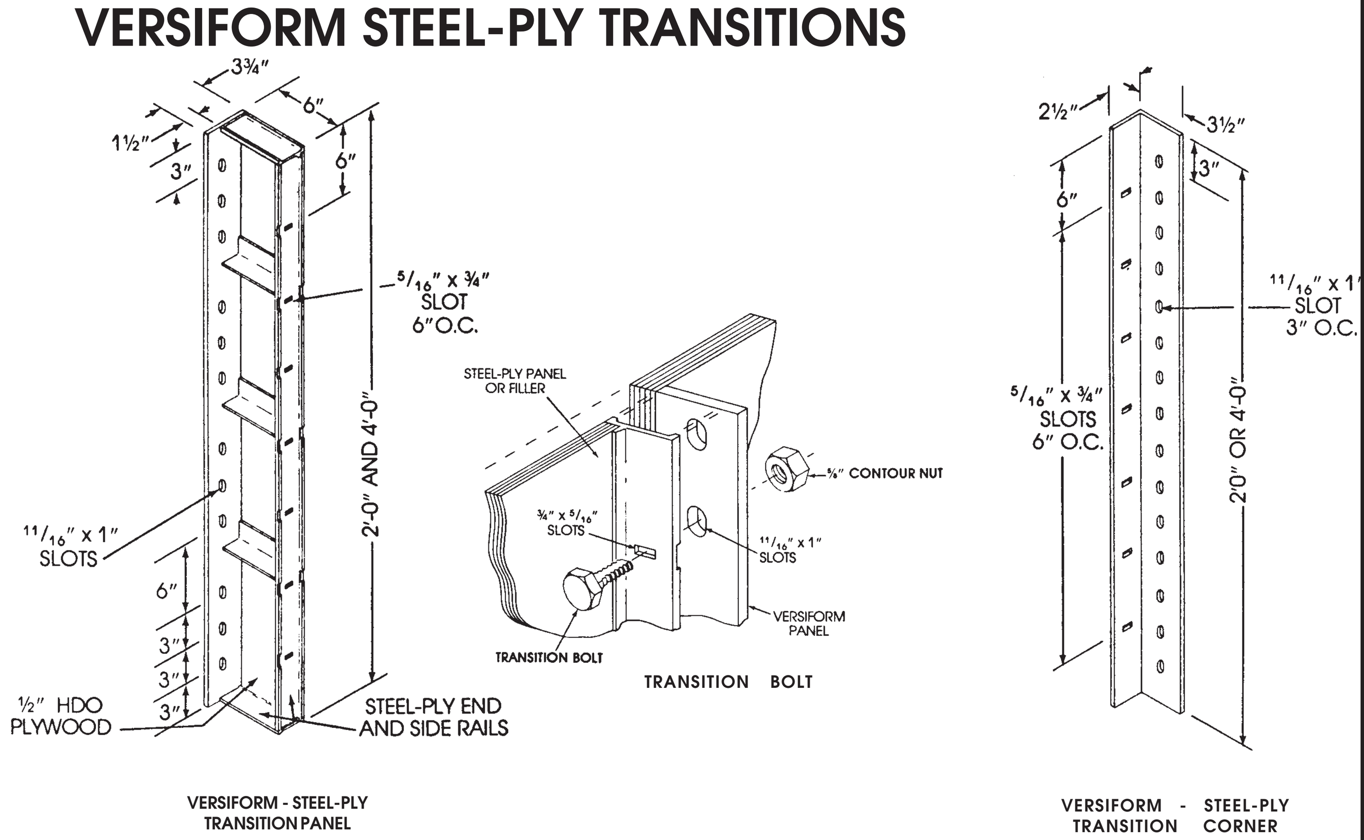

PANELS

WIDTH - FT.	8		6		4		3'-6"		3'-0"		2'-6"		2'-0"		1'-0"	
HEIGHT - FT.	CODE	WT. (LB.)	CODE	WT. (LB.)	CODE	WT. (LB.)	CODE	WT. (LB.)	CODE	WT. (LB.)	CODE	WT. (LB.)	CODE	WT. (LB.)	CODE	WT. (LB.)
4	33084	283	33029	238	33044	160	33054	138	33027	123	33051	109	33024	93	33097	61
3	33083	224	33063	207	33043	148	33053	109	33026	104	33050	86	33023	61	33096	47
2	33082	156	33028	118	33042	93	-	-	33025	61	--	--	33022	50	33096	33
1	33081	93	33061	64	33041	50	-		33031	32	--	--	33021	26	--	--

OUTSIDE CORNER

LENGTH (FT.)	CODE	WT. (LB.)
8	33278	44
4	33274	22
2	33272	11

STEEL RIGID CORNER

LENGTH (FT.)	CODE	WT. (LBS.)
8	33307	238
4	33306	122
2	33305	68

FLEXING CORNER

LENGTH (FT.)	CODE	WT. (LBS.)
8	610052	217
4	610051	111
2	610050	59

3 PIECE STRIPPING CORNER

LENGTH (FT.)	CODE	WEIGHT (LBS.)
8	33232	291
4	33231	146
2	33230	74

INSIDE HALF CHAMFER

LENGTH (FT.)	CODE	WT. (LB.)
8	33087	61
4	33016	31
2	33015	15

OUTSIDE HALF CHAMFER

LENGTH (FT.)	CODE	WT. (LBS.)
8	33019	61
4	33018	31
2	33017	15

FILLER ANGLE

LENGTH (FT.)	CODE	WT. (LBS.)
8	33258	31
4	33254	15
2	33252	8

TRANSITION PANEL

LENGTH (FT.)	CODE	WT. (LB.)
-	-	-
4	33064	26
2	33062	14

TRANSITION CORNER

LENGTH (FT.)	CODE	WT. (LBS.)
-	-	-
4	33329	18
2	33328	9

TRIPLE HINGE CORNER

LENGTH (FT.)	CODE	WT. (LBS.)
8	33090	162
4	33091	84
2	33092	42

OTHER COMPONENTS

PRODUCT	CODE	WT. (LBS.)
WALER LIFT BRACKET	36069	14.7
WALER CONNECTOR	36070	11.8
LIFTING BRACKET	33360	11
16" LIFTING ROD	33260	1.1
WIDE WALKWAY BRACKET	33118	37
TRANSITION BOLT	40057	0.5
ANCHOR BRACKET	33220	100
DIAGONAL BRACKET	33221	43
28" LIFTING ROD	33261	1.9
40" LIFTING ROD	33262	2.7
52" LIFTING ROD	33263	3.6
LIFT SAFETY STRAP	33114	1
SHEAR PLATE	33222	20
BEARING WEDGE	33223	32
COREWALL TURNBUCKLE	10852	10
COLUMN HINGE	33339	4.5

WALERS & CONNECTIONS

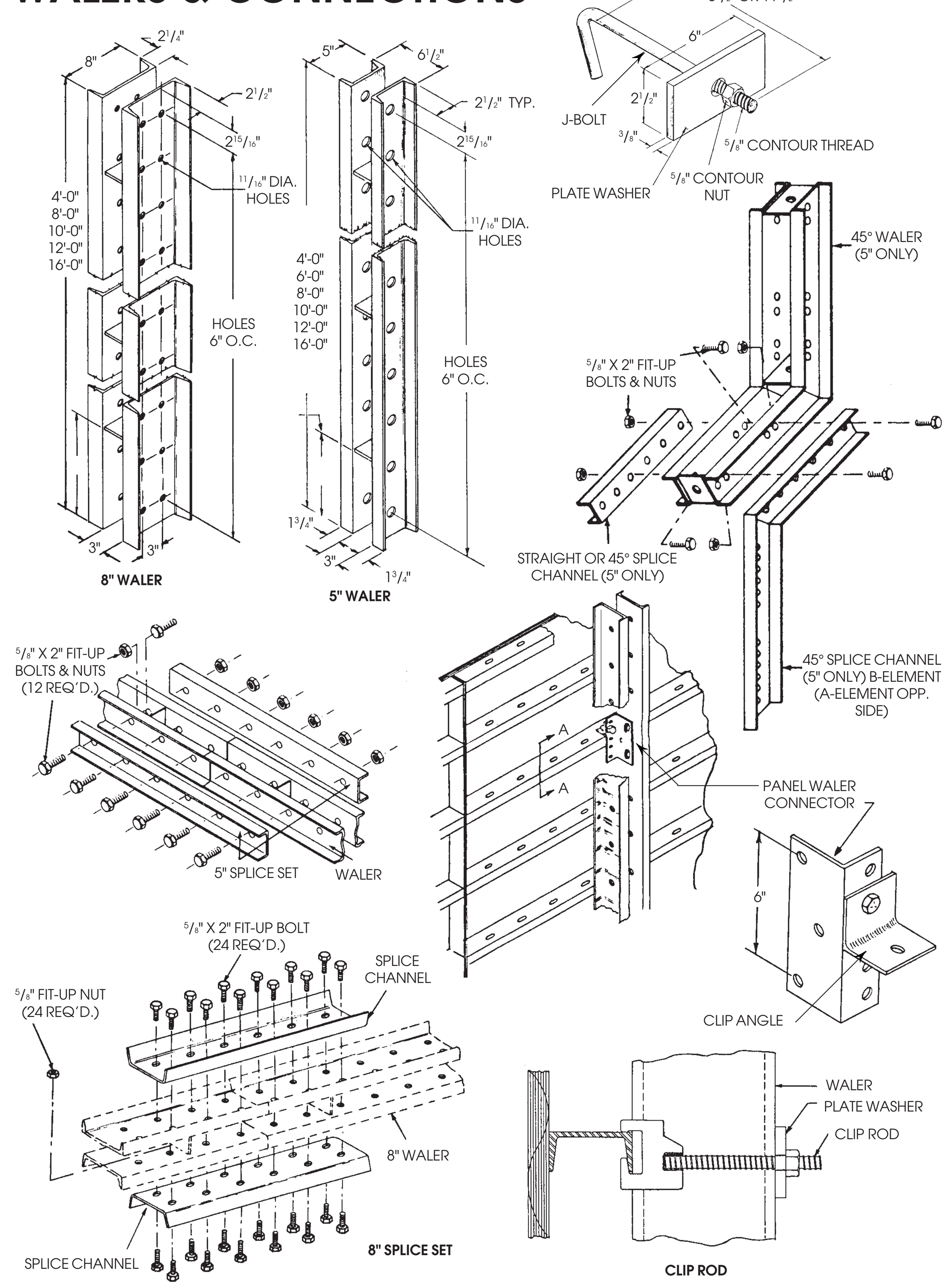

TIES

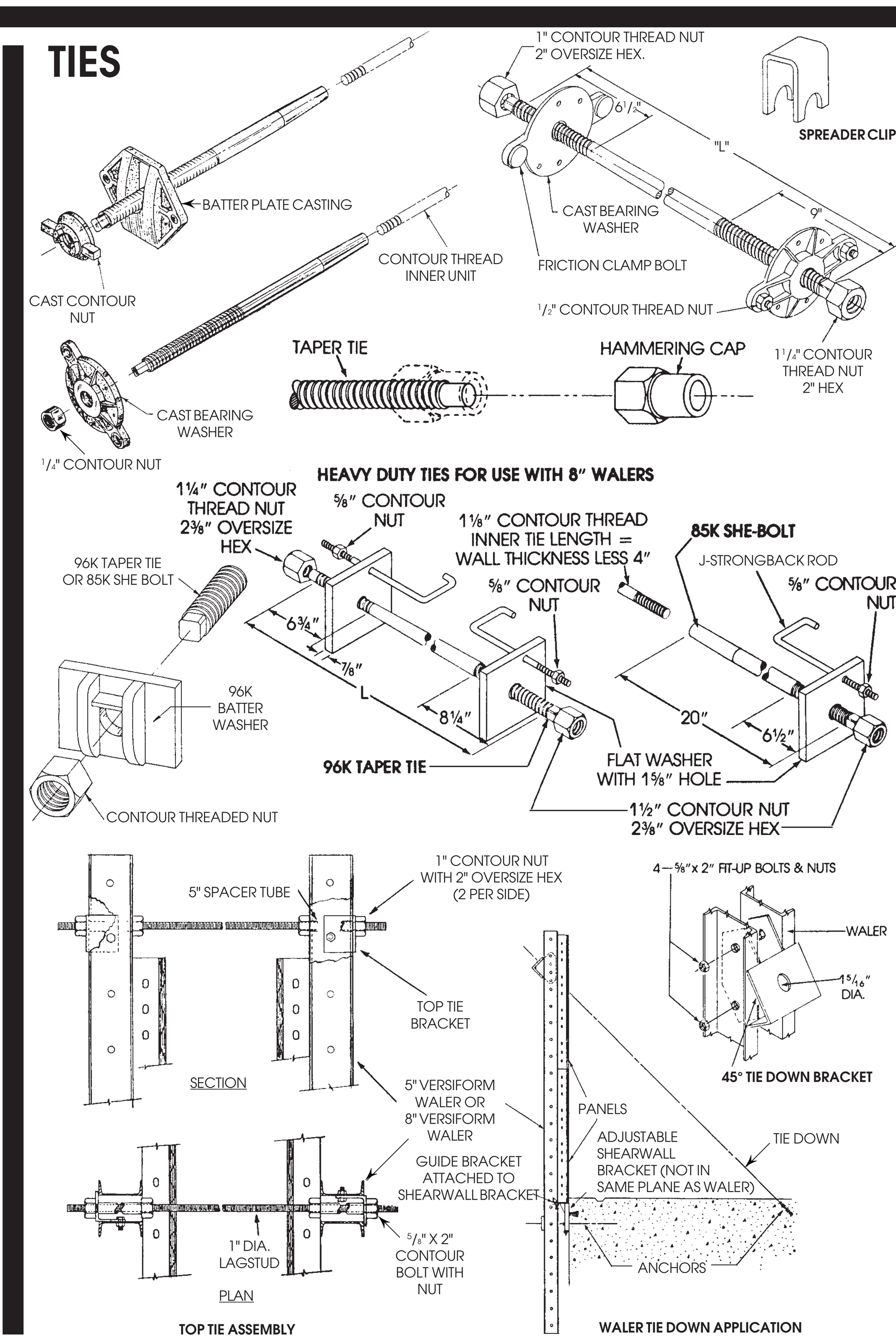

FORMWORK SUPPORT

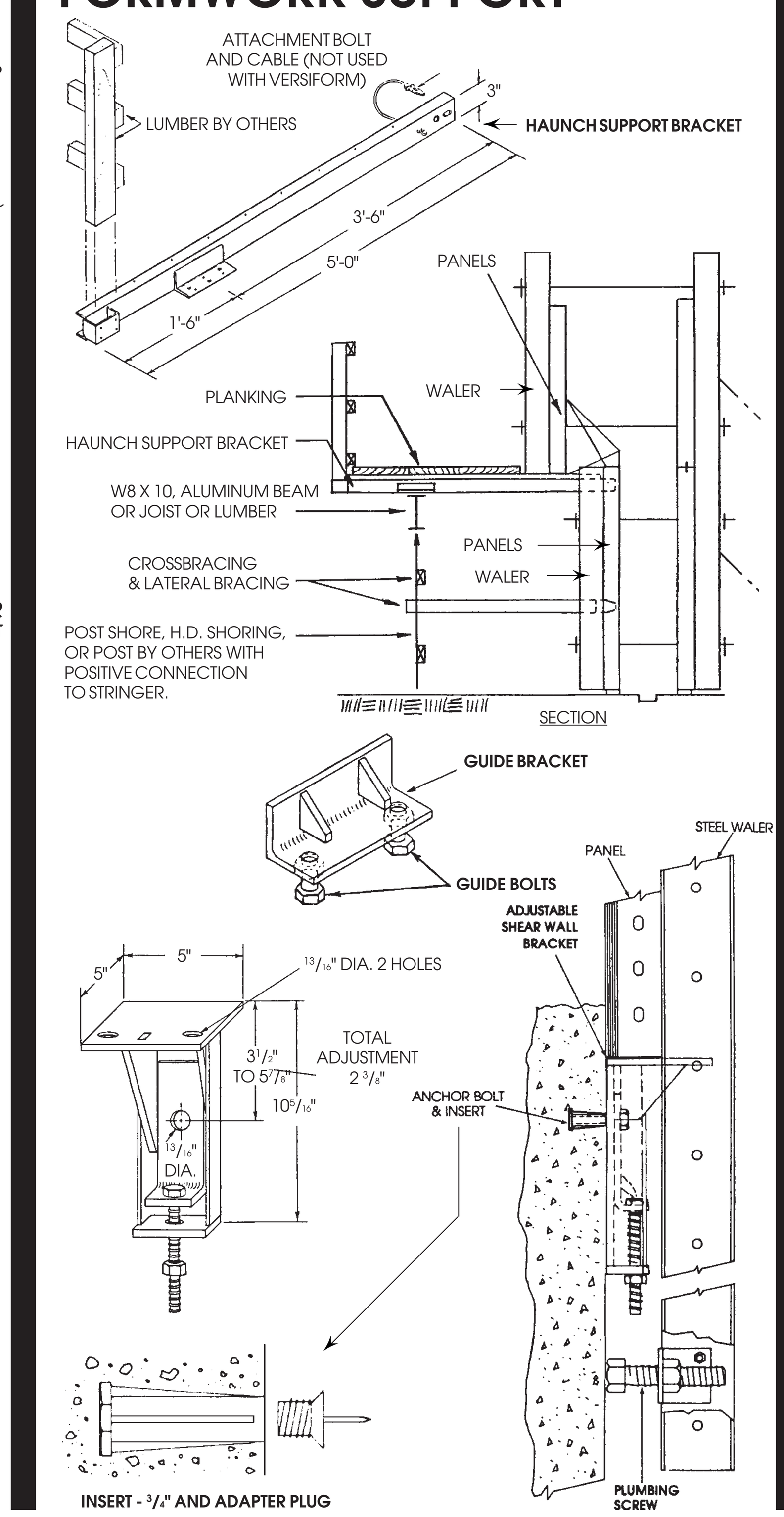

ALIGNMENT

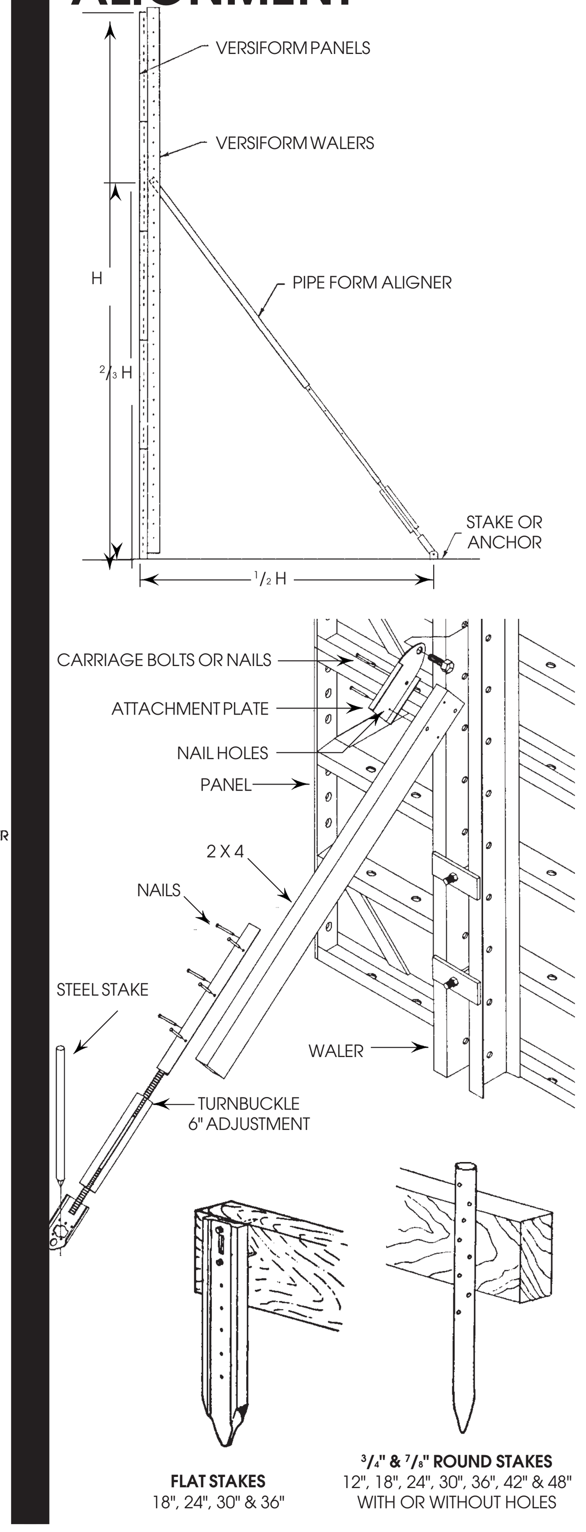

LIFTING

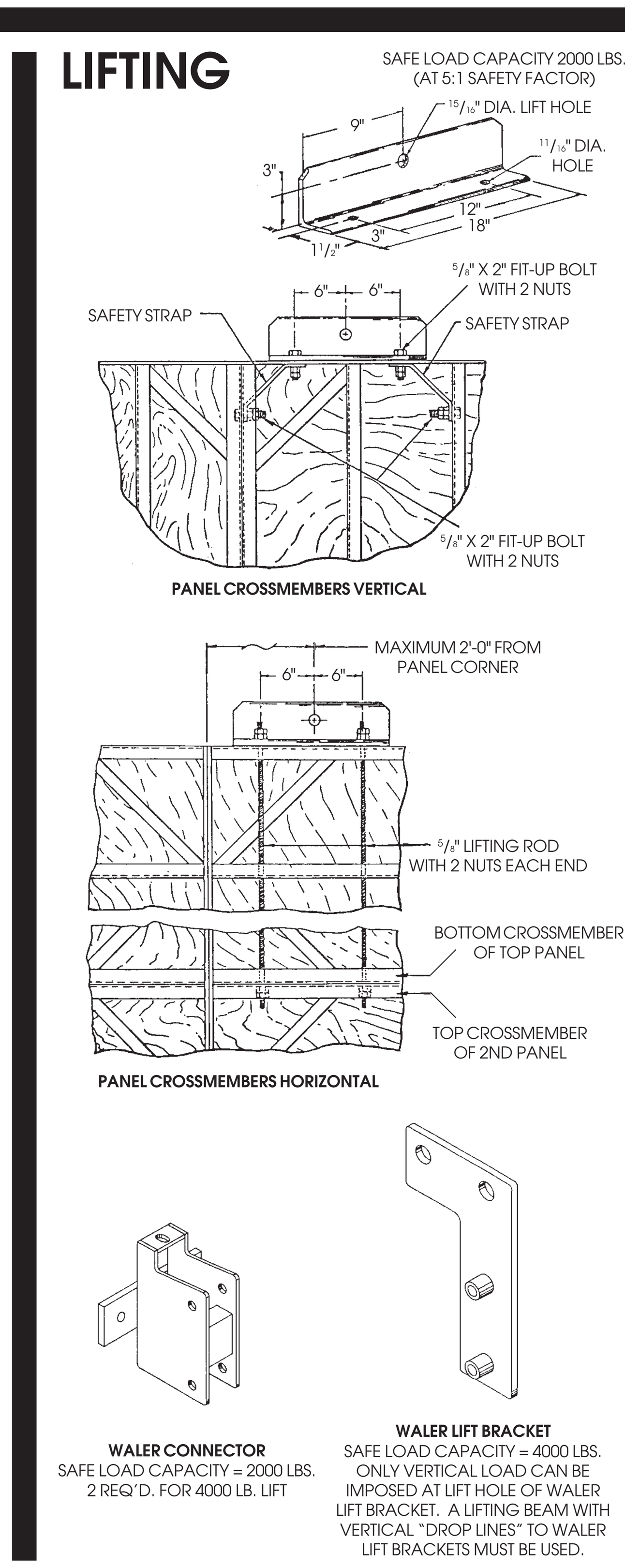

MISCELLANEOUS

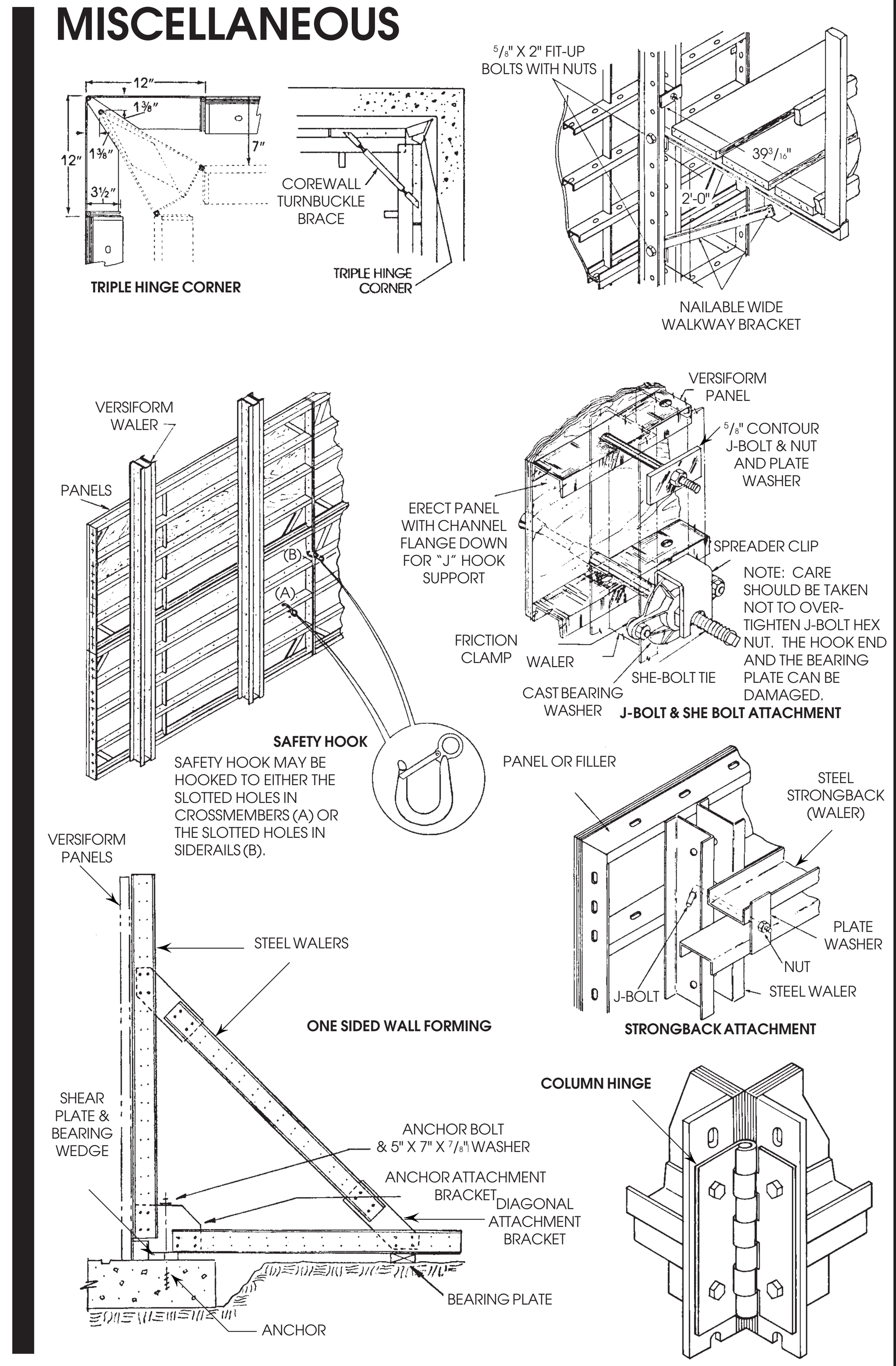

5" STEEL WALERS

LENGTH (FT.)	CODE	WT. (LBS.)
16	33353	221
12	33362	165
10	33352	135
8	33351	109
6	33348	82
4	33350	55

8" STEEL WALERS

LENGTH (FT.)	CODE	WT. (LBS.)
16	33549	381
12	33548	289
10	33547	240
8	33546	194
-	-	-
4	33545	99

PRODUCT	CODE	WEIGHT (LBS.)
5" WALER SPLICE CHANNEL	33354	27.8
8" WALER SPLICE CHANNEL	33656	38
45° SPLICE CHANNEL A-ELEMENT	33116	47
45° SPLICE CHANNEL B-ELEMENT	33539	47
45° WALER (5" ONLY)	33115	72
8 1/2" J-BOLT - CTR. THD.	31611	0.7
11 1/2" J-BOLT - CTR. THD.	31612	1.0
2 1/2" X 6" X 3/8" PLATE WASHER	33206	1.3
5/8" X 2" FIT-UP BOLT - CTR. THD.	31615	0.2
5/8" X 5" LONG BOLT - CTR. THD.	36077	0.4
5/8" FIT-UP NUT - CTR. THD.	36085	0.1
FORMING SHIM 1/16"	33374	0.1
8" CLIP ROD	33750	0.9
PANEL WALER CONNECTOR	33151	2.6
CLIP ANGLE	33779	0.7
45° TIE DOWN BRACKET	33379	10
35" - 50K TAPER TIE	31526	10
45" - 50K TAPER TIE	31527	13
55" - 50K TAPER TIE	31528	16
20" - 50K SHE-BOLT	31529	5.5
CAST BEARING WASHER	31525	3
BATTER PLATE CASTING	31626	3.5
1 1/4" CONTOUR NUT	31614	1
1" CONTOUR NUT	31613	1
FRICTION CLAMP BOLT	60138	1.5
1/2" CONTOUR NUT	31616	.6
SPREADER CLIP	31523	3
1" CAST CONTOUR NUT	31522	1.5
1 1/4" CAST CONTOUR NUT	31524	1.5
7/8" X 5" X 7" FLAT WASHER	36210	8.1
12" J-STRONGBACK ROD	14264	1
40" - 96K TAPER TIE	31357	17
50" - 96K TAPER TIE	31358	20.5
60" - 96K TAPER TIE	31359	25
70" - 96K TAPER TIE	31360	29
80" - 96K TAPER TIE	31361	34
20" - 85K SHE-BOLT	31356	9
1 1/2" CONTOUR NUT	31624	1.5
1 1/4" CONTOUR NUT - OVERSIZE	31623	1.5
1" HAMMERING CAP	31377	1.25
1 1/4" HAMMERING CAP	33533	1.3
ADJUSTABLE WALL BRACKET	40301	8.5
PLUMBING SCREW	33399	3
LIFTING BRACKET	33358	11
INSERT - 3/4"	40430	0.46
ADAPTER PLUG	40431	0.12
3/4"-10NC X 3" HEX HEAD BOLT GRADE 5	36084	0.44
GUIDE BRACKET	33594	1.5
HAUNCH SUPPORT BRACKET	40417	23.5
PIPE FORM ALIGNER	33697	111
TURNBUCKLE	40103	10
ATTACHMENT PLATE	41400	1.7
TOP TIE BRACKET	33745	2.7
5" SPACER TUBE	33746	.6
SAFETY HOOK	33596	1

THIS IDENTIFICATION CHART IS FOR REFERENCE ONLY. PLEASEA REFER TO VERSIFORM SAFETY SHEET AND APPLICATION GUIDE FOR THE SAFE APPLICATION FO THE EQUIPMENT.

SYMONS

SYMONS CORPORATION
200 E. Touhy Ave., P.O. Box 5018
Des Plaines, IL 60017-5018
708/298-3200 • FAX 708/635-9287
EASYLINK 5101010497 DSP CGO

© 1989, Symons Corporation
Printed in U.S.A.

Product Code No. 99817